GuideMyGrades

YOUR GOALS. OUR EXPERTISE.

EDEXCEL GCSE PHYSICS: QUESTIONS BY TOPIC

Electricity and Circuits (10)

GCSE Physics (Foundation) Topic 10

15 questions · 142 marks · Mark schemes included

Pearson Edexcel GCSE (9-1) Physics 1PH0, Foundation Tier, June 2018 - June 2025

guidemygrades.com
@Guidemygrades
@Guidemygrades
@Guidemygrades
info@guidemygrades.com
Piccadilly Business Centre, Unit C, Aldow Enterprise Park
Blackett Street, Manchester, M12 6AE

HOW TO USE THIS BOOKLET

Questions run from the lowest mark tariff to the highest, so similar questions sit together.
Click any row below to jump straight to that question.
On every question page, click ANSWER in the top-right corner to jump to its mark scheme.
Diagrams, graphs, tables and data are printed exactly as they appeared in the original papers.

	QUESTION	SOURCE	MARKS	PAGE
1.	**Q1**	Paper 2 June 2024	6	**4**
2.	**Q2**	Paper 2 November 2020	7	**6**
3.	**Q1**	Paper 2 November 2021	7	**9**
4.	**Q1**	Paper 2 June 2022	7	**11**
5.	**Q1**	Paper 2 June 2025	8	**14**
6.	**Q2**	Paper 2 June 2023	9	**18**
7.	**Q6**	Paper 2 June 2018	10	**22**
8.	**Q5**	Paper 2 November 2021	10	**25**
9.	**Q5**	Paper 2 June 2022	10	**27**
10.	**Q6**	Paper 2 November 2020	11	**31**
11.	**Q8**	Paper 2 November 2021	11	**34**
12.	**Q8**	Paper 2 June 2022	11	**37**
13.	**Q8**	Paper 2 June 2023	11	**40**
14.	**Q8**	Paper 2 June 2024	11	**44**
15.	**Q9**	Paper 2 June 2025	13	**49**

QUESTIONS

15 questions · 142 marks · lowest tariff first

6-MARK QUESTIONS

1 question in this booklet

1 (a) Figure 1 shows a circuit containing a battery and **four** other components.

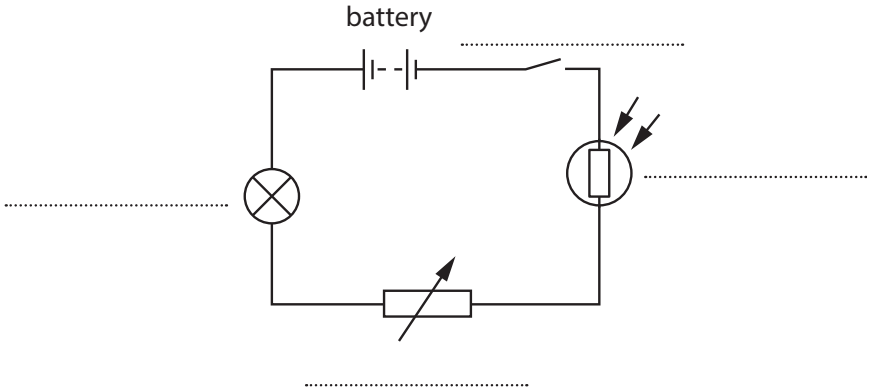

Figure 1

Label the **four** components in Figure 1, using words from the box.

ammeter	lamp	LDR
switch	thermistor	variable resistor

(4)

(b) The circuit in Figure 1 is switched on.

A charge of 1.2 C leaves the battery in a time of 4.0 s.

Calculate the current in the circuit.

Use the equation

$$\text{current} = \frac{\text{charge}}{\text{time}}$$

(2)

current = ... A

(Total for Question 1 = 6 marks)

7-MARK QUESTIONS

3 questions in this booklet

2 (a) Figure 4 shows the inside of a mains plug.

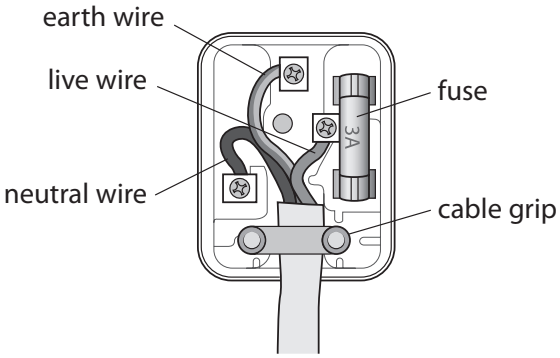

Figure 4

The mains plug has three safety features.

One of these safety features has been ticked in the table.

Put **two** more ticks in the table to show the other two safety features.

(2)

part of plug	safety feature
cable grip	✓
earth wire	
fuse	
live wire	
neutral wire	

(b) Figure 5 shows a charger for a car battery.

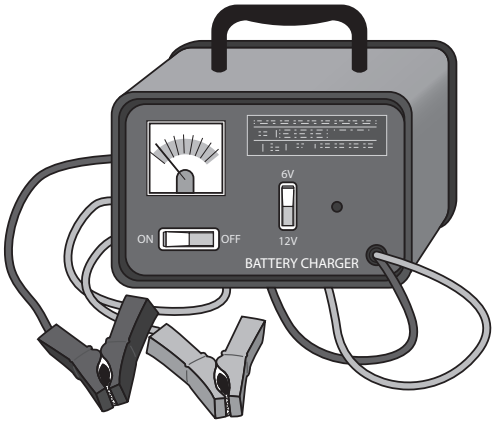

Figure 5

(i) The meter on the battery charger shows the current supplied to a battery.

The meter on the battery charger is

(1)

☒ **A** an ammeter

☒ **B** an ohmmeter

☒ **C** a voltmeter

☒ **D** a wattmeter

(ii) The battery charger supplies a steady current of 2.5 A to the battery.

Calculate the charge flowing to the battery in 8 minutes.

Use the equation

$$\text{charge} = \text{current} \times \text{time}$$

(2)

charge = ... C

(c) The transformer in another battery charger has a primary coil and a secondary coil.

The voltage across the primary coil = 230 V.

The voltage across the secondary coil = 15 V.

The current in the secondary coil is 3.1 A.

Calculate the current in the primary coil.

Use the equation

$$\text{primary current} = \frac{\text{secondary voltage} \times \text{secondary current}}{\text{primary voltage}}$$

(2)

current = ... A

(Total for Question 2 = 7 marks)

1 Figure 1 shows an electrical circuit.

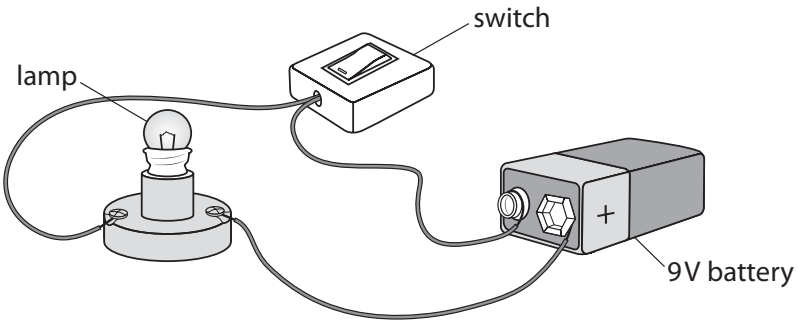

Figure 1

(a) Draw a circuit diagram of the electrical circuit in Figure 1 in the space below.

(4)

(b) When the current in a lamp is 0.15 A, the resistance of the lamp is 40 Ω.

Calculate the voltage across the lamp.

Use the equation

$$V = I \times R$$

(2)

voltage = ... V

(c) Figure 2 shows an ammeter that can read up to 5 A.

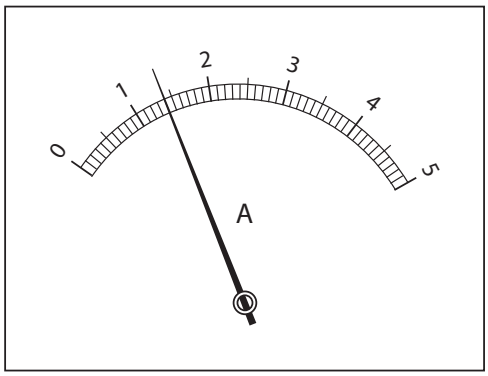

Figure 2

State the value of the current shown on the ammeter in Figure 2.

(1)

current = ... A

(Total for Question 1 = 7 marks)

1 This question is about electrical circuits.

(a) Draw **one** straight line from each circuit symbol to its description.

(3)

circuit symbol	**description**
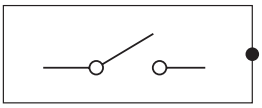	battery
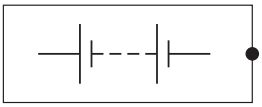	LED
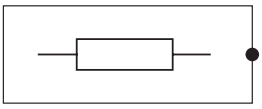	switch
	resistor

(b) Figure 1 shows a lamp in a circuit.

The lamp is switched on.

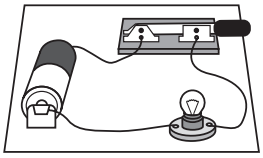

Figure 1

(i) The current in the lamp is a flow of

(1)

☒ **A** atoms

☒ **B** electrons

☒ **C** neutrons

☒ **D** protons

(ii) The current in the lamp is 0.21 A.

Calculate the charge that flows through the lamp in a time of 300 s.

State the unit of charge.

Use the equation

$$\text{charge} = \text{current} \times \text{time}$$

(3)

charge = ... unit .....

(Total for Question 1 = 7 marks)

8-MARK QUESTIONS

1 question in this booklet

1 (a) Figure 1 shows two lamps in series in a circuit.

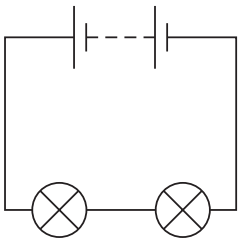

Figure 1

The resistance of each lamp is 12 Ω.

(i) Calculate the total resistance of the lamps in the circuit.

(1)

total resistance of lamps = ... Ω

(ii) The current in a lamp in Figure 1 is 0.50 A.

The resistance of the lamp is 12 Ω.

Calculate the voltage across this lamp.

Use the equation

$$V = I \times R$$

(2)

voltage = ... V

(iii) The voltage across a different lamp is 4.5 V.

The current in this lamp is 0.40 A.

Calculate the energy transferred to the lamp in 5 minutes.

Use the equation

$$E = I \times V \times t$$

(3)

energy transferred = ... J

(b) Figure 2 shows a circuit with a switch, two ammeters and two resistors in series with a cell.

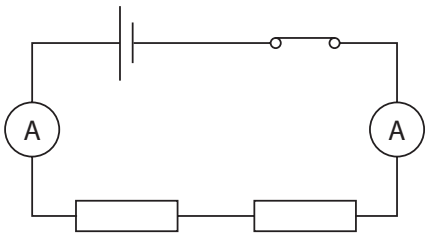

Figure 2

(i) Which of these statements is true for the circuit in Figure 2?

(1)

☒ **A** the switch is in the open position

☒ **B** the ammeters measure the current in the circuit

☒ **C** the resistors are variable resistors

☒ **D** the current supplied by the cell is alternating current (a.c.)

(ii) The resistance of the circuit is increased by adding one resistor to the circuit.

State how increasing the resistance changes the current in the circuit.

(1)

.....

.....

(Total for Question 1 = 8 marks)

9-MARK QUESTIONS

1 question in this booklet

2 (a) Figure 3 shows the parts in an electrical circuit.

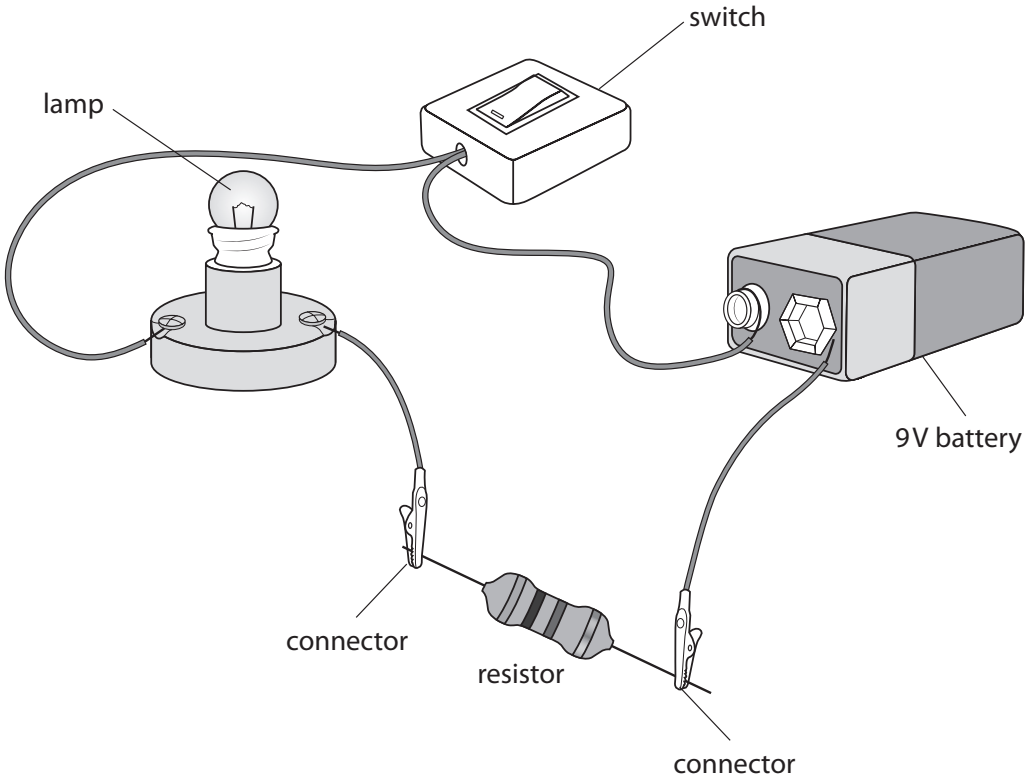

Figure 3

Draw the circuit diagram of this electrical circuit in the space provided.

The battery symbol and some of the connecting wires have been drawn for you.

(4)

circuit diagram

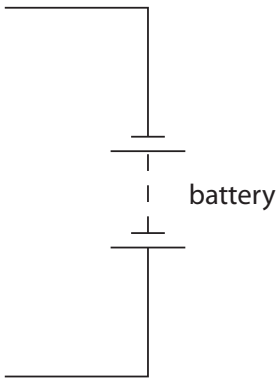

(b) Figure 4 shows the current flowing into and out of point P in part of a circuit.

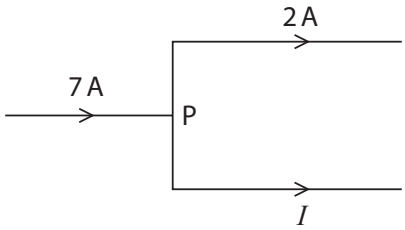

Figure 4

Which of these is the value of current I?

(1)

☒ **A** 2 A

☒ **B** 5 A

☒ **C** 7 A

☒ **D** 9 A

(c) (i) There is a current of 0.46 A in a lamp.

Calculate the total charge that flows through the lamp in 30 seconds.

Use the equation

charge = current × time in seconds

(2)

charge = ... C

(ii) The voltage across the lamp is 6.0 V.

The current in the lamp is 0.46 A.

Calculate the energy transferred to the lamp in one minute.

Use the equation

energy transferred = current × voltage × time in seconds

(2)

energy transferred = ... J

(Total for Question 2 = 9 marks)

10-MARK QUESTIONS

3 questions in this booklet

6 (a) Figure 12 shows a graph of current against potential difference for an electrical component.

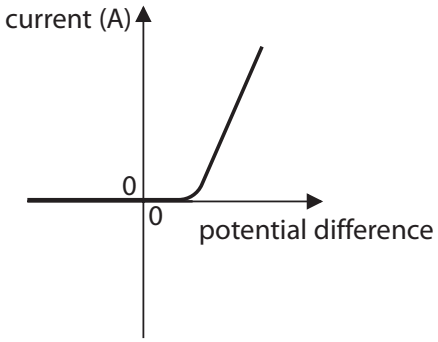

Figure 12

Which electrical component will show this variation of current with potential difference?

(1)

- ☒ **A** thermistor
- ☒ **B** low value resistor at constant temperature
- ☒ **C** high value resistor at constant temperature
- ☒ **D** diode

(b) A lamp is connected to a potential difference of 0.24 V.

The current in the lamp is 0.12 A.

(i) Calculate the power of the lamp.

Use the equation

$P = I \times V$

(2)

power of the lamp = ... W

(ii) The potential difference is changed to 0.30 V.
The current in the lamp is now 0.13 A.

The lamp is switched on for 35 s.

Calculate the energy that is transferred in this time.
Select an equation from the list of equations at the end of this paper.

(2)

energy transferred = ... J

(iii) The current in the lamp stays at 0.13 A.

Calculate the charge that flows through the lamp in 35 s.
Use the equation

$Q = I \times t$

(2)

charge = ... C

(c) A student measures the current in the lamp for several values of potential difference across the lamp.

Figure 13 shows the student's results.

potential difference across the lamp in volts (V)	current through the lamp in amps (A)
0.06	0.05
0.12	0.08
0.18	0.10
0.24	0.12
0.30	0.13
0.36	0.13

Figure 13

The student uses the results in Figure 13 to write this conclusion.

'As the potential difference across the lamp increases, the current in the lamp increases and the relationship is directly proportional.'

Comment on the student's conclusion.

(3)

.....

.....

.....

.....

.....

.....

(Total for Question 6 = 10 marks)

5 This question is about using the mains electricity supply.

(a) (i) An electric kettle is used to boil some water.
The mains supply voltage is 230 V.
The power supplied to the kettle is 1.9 kW.

Calculate the current in the kettle.
Use the equation

$$I = \frac{P}{V}$$

(2)

current supplied to the kettle = ... A

(ii) A coffee machine takes 120 s to heat some water.

Mains supply voltage = 230 V
Current in this coffee machine = 7.4 A

Calculate the energy transferred to the coffee machine in 120 s.

Use an equation selected from the list of equations at the end of the paper.

(2)

energy transferred to coffee machine = ... J

(b) Figure 10 shows the inside of a mains plug.
The neutral wire is labelled.

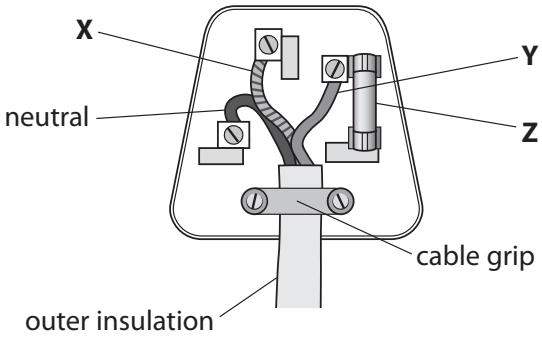

Figure 10

(i) State the name of wire **X** and the name of wire **Y**.

(2)

wire **X** .....

wire **Y** .....

(ii) State the name of component **Z**.

(1)

component **Z** .....

(c) A transformer is used to connect a laptop computer to the mains electricity supply.
The input voltage to the transformer is 230 V.
The output current from the transformer is 2.37 A.
The transformer has an output voltage of 19.0 V.
The transformer used is 100% efficient.

Calculate the input current to the transformer.

Use the equation

input current × input voltage = output current × output voltage

(3)

input current = ... A

(Total for Question 5 = 10 marks)

5 (a) An electric water pump is powered by the 230 V mains supply.

Figure 12 shows the inside of the plug on the cable to the pump.

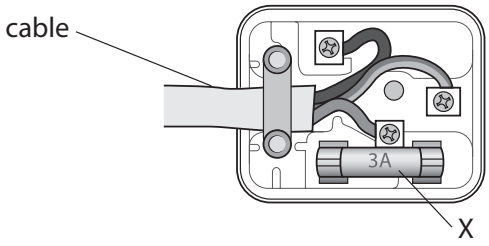

Figure 12

(i) One wire in the plug is the earth wire.

The other two wires are

(1)

☒ **A** live and negative

☒ **B** live and neutral

☒ **C** positive and negative

☒ **D** positive and neutral

(ii) Describe the purpose of the component labelled X.

(2)

.....

.....

.....

.....

(b) The 230 V mains supply transfers 9000 J of energy to the pump motor in 1 minute.

Calculate the current in the pump motor.

Use the equation

$$I = \frac{E}{V \times t}$$

(3)

current = ... A

(c) The system transfers 8400 J of useful kinetic energy to the water passing through the pump in 1 minute.

Figure 13 shows a diagram of the energy transfers.

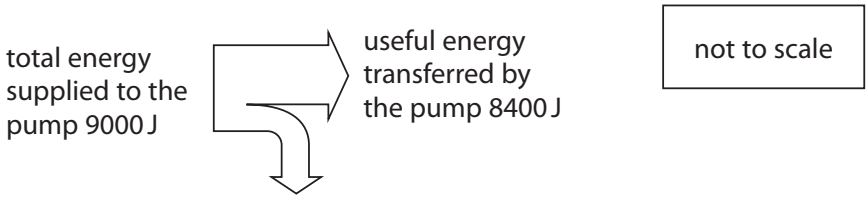

Figure 13

(i) Explain why the useful energy transferred to the water is different from the total energy supplied to the pump.

(2)

.....

.....

.....

.....

(ii) Calculate the efficiency of the pump.

Use the equation

$$\text{efficiency} = \frac{\text{useful energy transferred by the pump}}{\text{total energy supplied to the pump}}$$

(2)

efficiency = ...

(Total for Question 5 = 10 marks)

11-MARK QUESTIONS

5 questions in this booklet

6 A student investigates resistors connected in series in an electrical circuit.

The student has

- a 3.0 V battery
- a 22 Ω resistor
- a resistor marked X.

The student does not know the value of the resistor marked X.

The student decides to measure the potential difference (voltage) across resistor X.

Figure 15 shows the circuit that the student connected.

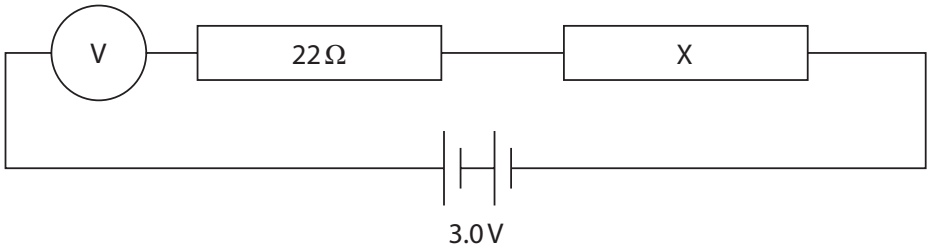

Figure 15

(a) The circuit is connected incorrectly.

Describe how the student should correct the mistake.

(2)

.....

.....

.....

.....

(b) The student corrects the mistake.

The voltage across resistor X is 2.1 V.

The circuit is connected to a 3 V battery.

(i) State the value of the voltage across the 22 Ω resistor.

(1)

voltage across 22 Ω resistor = ... V

(ii) The current in resistor X is 0.041 A.

The voltage across resistor X is 2.1 V.

Show that the resistance of resistor X must be about 50 ohms.

Use the equation

$$V = I \times R$$

(2)

(iii) Calculate the power in resistor X when the voltage across X is 2.1 V and the current in resistor X is 0.041 A.

(2)

power = ... W

(iv) Calculate the overall resistance of the 22 ohm resistor and resistor X.

(2)

overall resistance = ... Ω

(v) The current in the circuit is 0.041 A.

The voltage across the battery is 3.0 V.

Calculate the energy transferred in 2 minutes.

Use the equation

$$E = I \times V \times t$$

(2)

energy = ... J

(Total for Question 6 = 11 marks)

8 (a) Figure 17 shows two different types of the same circuit component.

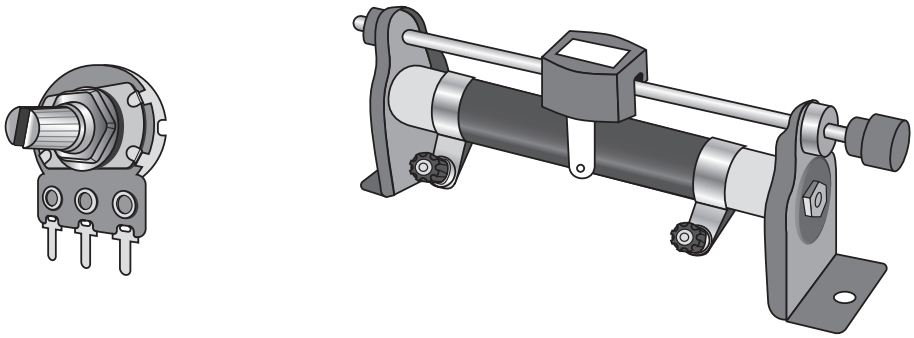

Figure 17

What is the name of this circuit component?

(1)

☒ **A** diode

☒ **B** light dependent resistor

☒ **C** thermistor

☒ **D** variable resistor

(b) Which row in the table describes the way that ammeters and voltmeters should be connected with a component in a circuit?

(1)

	ammeter	voltmeter
☒ **A**	in parallel	in parallel
☒ **B**	in parallel	in series
☒ **C**	in series	in parallel
☒ **D**	in series	in series

(c) Figure 18 shows the results from an experiment where the potential difference (voltage) across a filament lamp was varied.

The current and voltage were measured.

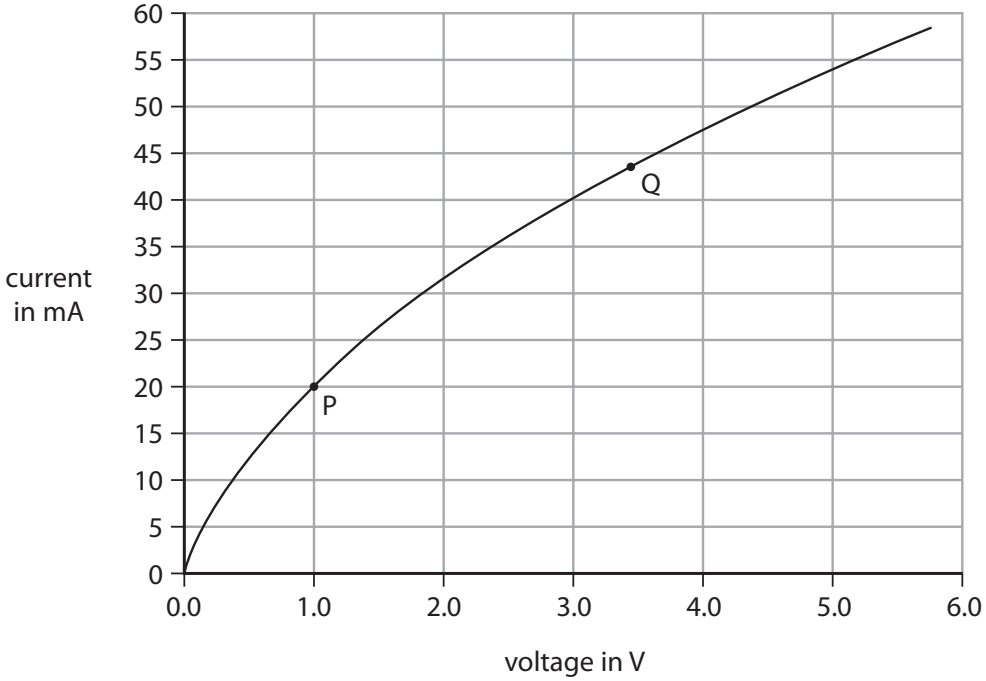

Figure 18

(i) Describe the relationship between the current and the voltage as shown in the graph in Figure 18.

(2)

.....

.....

.....

.....

(ii) Use the values of the voltage and current at point P and at point Q on the graph in Figure 18 to complete the table in Figure 19.

(2)

	voltage in V	current in mA
point P		
point Q		

Figure 19

(iii) Calculate the resistance of the filament lamp when the voltage is 4.5 V and the current is 51 mA.

Use the equation

$$R = \frac{V}{I}$$

(2)

resistance = ... Ω

(iv) Explain why the resistance of the filament lamp changes as the voltage across it increases.

(3)

.....

.....

.....

.....

.....

.....

(Total for Question 8 = 11 marks)

8 (a) Figure 19 shows a lamp connected to a d.c. power supply.

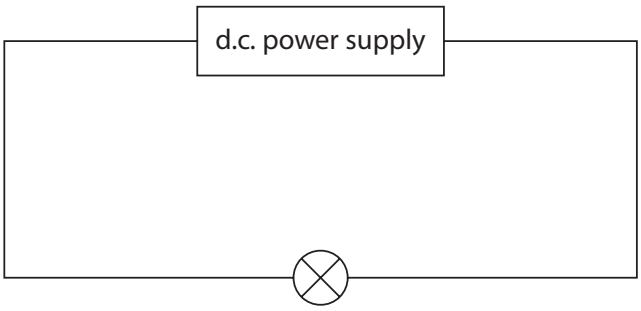

Figure 19

The power supply provides a potential difference (voltage) of 4.5 V.

The current in the lamp is 0.30 A.

(i) Calculate the resistance of the lamp.

Use the equation

$$R = \frac{V}{I}$$

(1)

resistance = ... Ω

(ii) Calculate the power supplied to the lamp.

(2)

power = ... W

(b) Another **identical** lamp is added to the circuit, as shown in Figure 20.

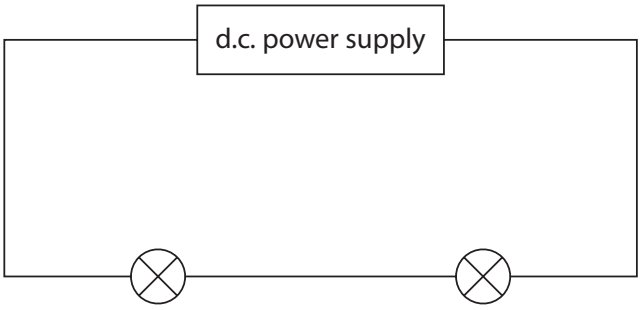

Figure 20

The power supply provides the same potential difference as it provided in the circuit in Figure 19.

State and explain the difference between the brightness of the lamp in Figure 19 and the brightness of a lamp in Figure 20.

(3)

.....

.....

.....

.....

.....

(c) A student is given a low voltage power supply and 1 m of resistance wire.

The student uses these and other pieces of equipment to measure the resistance of just 50 cm of the resistance wire.

Draw a diagram of the circuit that the student should use.

Your circuit diagram should identify the pieces of equipment that the student uses.

(3)

(d) Describe the difference between direct current (d.c.) and alternating current (a.c.) in electrical circuits.

(2)

.....

.....

.....

.....

(Total for Question 8 = 11 marks)

8 (a) The voltage (potential difference) across a length of wire is 1.5 V.

A charge of 0.042 C flows through the wire.

Calculate the energy transferred.

Use the equation

$$E = Q \times V$$

(2)

E = ... J

(b) Figure 20 shows some of the apparatus that students use to determine the resistance of a piece of iron wire.

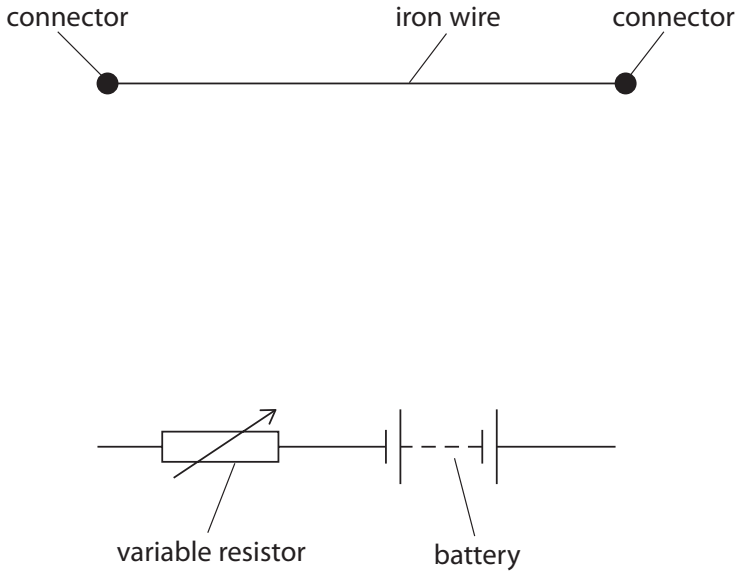

Figure 20

Add connecting wires, a voltmeter and an ammeter to complete the circuit in Figure 20 so that the students can determine the resistance of the piece of iron wire.

(2)

(c) The students extend the investigation to determine how the resistance of the iron wire changes with its length.

(i) Give the name of **one** additional piece of apparatus the students would need.

(1)

.....

(ii) Figure 21 shows a graph of the results.

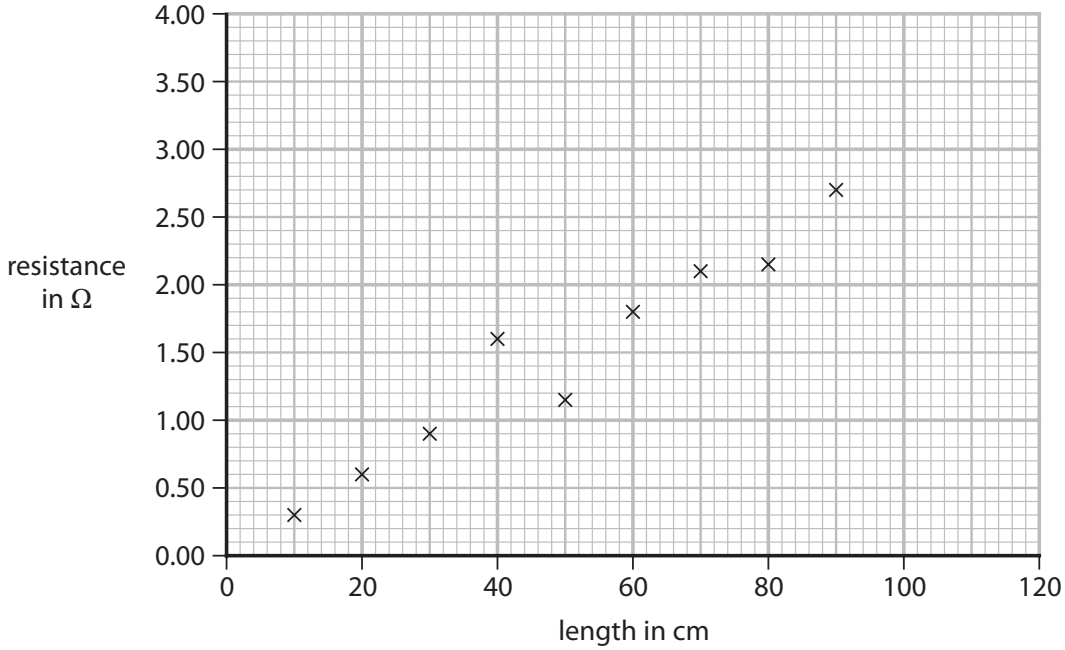

Figure 21

Draw a straight line of best fit on Figure 21.

(1)

(iii) Use Figure 21 to estimate the resistance of a 100 cm length of the iron wire.

(1)

resistance = ... Ω

(iv) The variable resistor shown in Figure 20 is used to prevent the iron wire from becoming too hot.

Explain how the variable resistor is used to prevent the iron wire from becoming too hot.

(2)

.....

.....

.....

.....

(d) The potential difference (voltage) across another piece of wire is 1.56 *V*.

The current in the wire is 0.45 *A*.

Calculate the resistance of this piece of wire.

Use the equation

$$V = I \times R$$

(2)

resistance = ... Ω

(Total for Question 8 = 11 marks)

8 (a) Figure 20 is a circuit diagram.

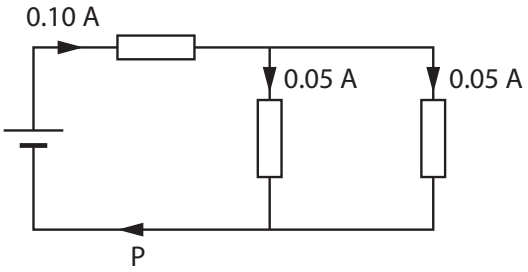

Figure 20

The current at P is

(1)

☒ **A** 0.05 A

☒ **B** 0.10 A

☒ **C** 0.15 A

☒ **D** 0.20 A

(b) Some students investigate resistors in parallel.

The students set up a circuit containing **four** identical resistors.

The circuit used is shown in Figure 21.

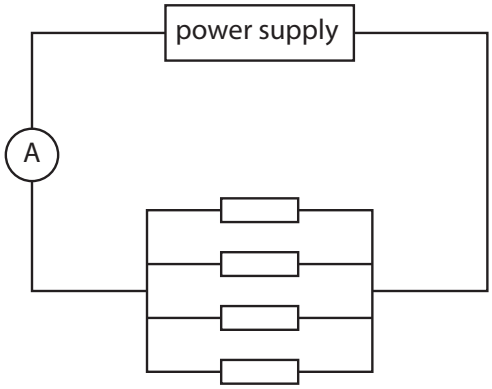

Figure 21

The students measure the current from the power supply and the voltage (p.d.) across the resistors.

(i) On Figure 21, draw a voltmeter connected to measure the voltage (p.d.) across the resistors.

(1)

The students remove one resistor and measure the current and voltage again with only 3 resistors in the circuit.

They repeat the measurements of current and voltage with only 2 resistors in the circuit and then with only 1 resistor in the circuit.

Figure 22 is a table of their results.

number of resistors	current in mA	voltage in V
4		6.00
3	27.3	6.00
2	18.2	6.00
1	9.1	6.00

Figure 22

(ii) Using data from the table in Figure 22, predict the current from the power supply when there are 4 resistors in the circuit.

(1)

current = ... mA

(iii) Using data from the table in Figure 22, calculate the resistance of **only 1** resistor.

(3)

resistance = ... Ω

(iv) Using data from the table in Figure 22, explain what happens to the **total resistance of the circuit** as the number of resistors in parallel decreases.

(3)

.....

.....

.....

.....

.....

.....

(c) An electric fire is connected to a 230 V mains supply.

A current of 9.0 A is supplied to the fire.

Calculate the power supplied to the fire.

Use the equation

power = current × voltage

(2)

power = ... W

(Total for Question 8 = 11 marks)

13-MARK QUESTIONS

1 question in this booklet

9 (a) State the frequency of the supply of electricity to homes in the UK (United Kingdom).

(1)

frequency = ... Hz

(b) The mains supply to the television is 230 V.

The current supplied to the television is 0.53 A.

Calculate the power input to the television.

Use the equation

$$P = I \times V$$

(2)

power = ... W

(c) A plug connects a television to the mains supply.

(i) The plug contains a fuse that is connected to the

(1)

☒ **A** live pin

☒ **B** negative pin

☒ **C** neutral pin

☒ **D** positive pin

(ii) A 3 A fuse is used in the plug.

Explain what happens if a fault causes the current to rise to more than 3 A.

(2)

.....

.....

.....

.....

(iii) A fuse is a safety device.

State **one** other safety device that can be used in domestic electrical wiring.

(1)

.....

.....

*(d) Figure 18 is a diagram showing a part of the National Grid, used to supply electrical power to homes.

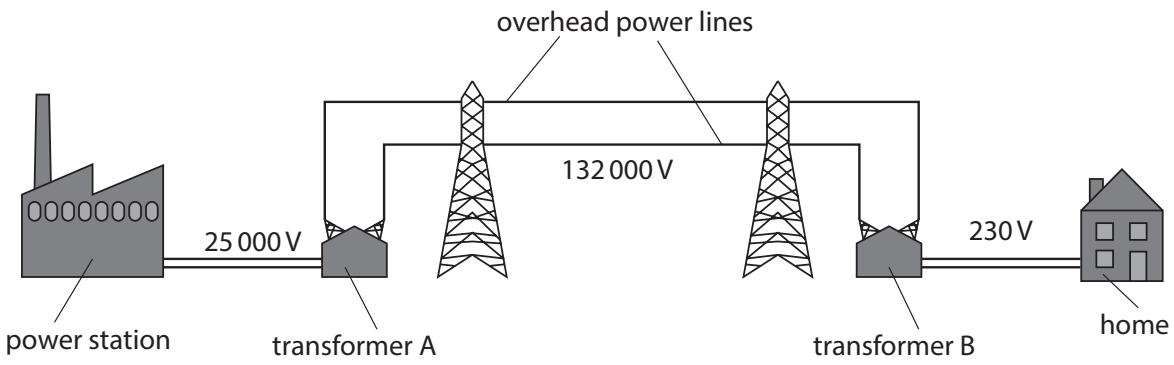

Figure 18

Using information from Figure 18, explain how electrical power is distributed from power stations to homes.

Your answer should refer to

- the role of the transformers
- the different voltages
- how energy losses are reduced

(6)

Answer lines for this question are on page 33.

(Total for Question 9 = 13 marks)

MARK SCHEMES

official Pearson Edexcel mark schemes

Question	Answer	Additional guidance	Mark
1(a)	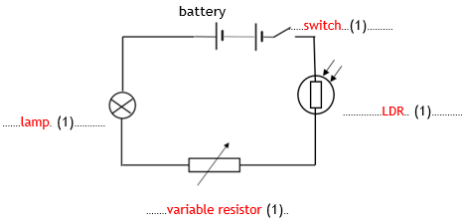	**accept** lines drawn from the words in the box to the spaces **accept** bulb for lamp	**(4)** **AO1.1**

Question	Answer	Additional guidance	Mark
1(b)	substitution (1) (current =) $\frac{1.2}{4(.0)}$ evaluation (1) (current =) 0.3(0) (A)	 award full marks for the correct answer without working	**(2)** **AO2.2**

(Total for question 1 = 6 marks)

Question	Answer	Mark

Question number	Answer	Additional guidance	Mark
2 a	<table><tr><th>part of plug</th><th>safety feature</th></tr><tr><td>cable grip</td><td>✓</td></tr><tr><td>earth wire</td><td>✓</td></tr><tr><td>fuse</td><td>✓</td></tr><tr><td>live wire</td><td></td></tr><tr><td>neutral wire</td><td></td></tr></table>	Note that the tick next to cable grip is already in the grid more than two additional ticks deduct one mark for each incorrect tick.	(2)

Question number	Answer	Additional guidance	Mark
2 bi	A an ammeter B, C and D are incorrect because they do not show current		(1)

Question number	Answer	Additional guidance	Mark
2bii	substitution (1) (Q) = 2.5 x 8 (x60) evaluation (1) 1200 (C)	 allow 20 (C) for 1 mark award full marks for the correct answer without working	(2)

Question number	Answer	Additional guidance	Mark
2c	substitution (1) $\frac{15 \times 3.1}{230}$ evaluation (1) 0.20 (A)	 allow any value that rounds to 0.20; e.g. 0.2022 award full marks for the correct answer without working	(2)

Total for question 2 = 7 marks

Question number	Answer	Additional guidance	Mark
1(a)	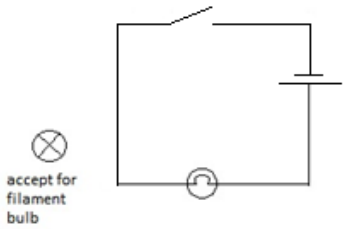 battery/cell symbol (1) lamp symbol (1) switch symbol (1) then complete series circuit shown (1)	ignore polarity of battery	(4) AO3

Question number	Answer	Additional guidance	Mark
1(b)	substitution (1) 0.15 x 40 evaluation (1) 6(.0) (V)	award full marks for correct answer without working	(2) AO2

Question number	Answer	Mark
1(c)	1.4 (A)	(1) AO2

Total for Question 1 =7 marks

Question number	Answer	Additional guidance	Mark
1 (a)	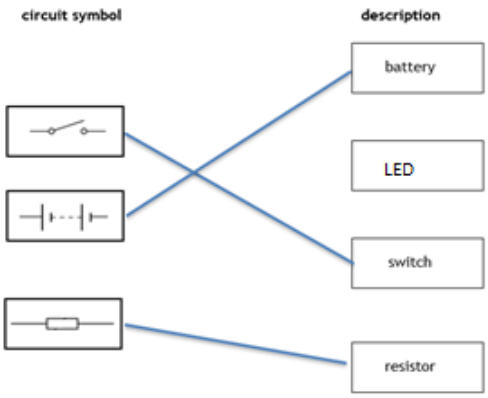	1 mark for each correct line. more than one line to or from any box loses the mark for that symbol.	**(3)** **AO1**

Question number	Answer	Additional guidance	Mark
1 (b)(i)	**B** electrons A C and D are incorrect because they do not move through a conductor to create an electric current.		**(1)** **AO1**

Question number	Answer	Additional guidance	Mark
1 (b)(ii)	substitution (1) (charge =) 0.21 x 300 evaluation (1) (charge =) 63 unit (1) coulombs	 award full marks for the correct answer without working independent mark C(oulombs) c As	**(3)** **AO2** **AO1**

Total 7 marks

Question Number	Answer	Additional guidance	Mark
1 (a) (i)	24 (Ω)		**(1)** **AO1.2**

Question Number	Answer	Additional guidance	Mark
1 (a) (ii)	substitution (1) (V=) 0.50 x 12 evaluation (1) 6.0 (V)	 accept 6 award full marks for the correct answer without working	**(2)** **AO2.1**

Question Number	Answer	Additional guidance	Mark
1 (a)(iii)	time converted to s (1) 300 (s) substitution (1) (E=) 0.4 x 4.5 x 5 (x60) evaluation (1) 540 (J)	 accept 5 x 60 seen 0.4 x 4.5 x 300 scores first 2 marks 9 (J) scores 2 marks (no conversion to seconds) 540 to any other power of ten scores 2 marks award full marks for the correct answer without working	**(3)** **AO2.1**

Question Number	Answer	Mark
1(b)(i)	**B** the ammeters measure the current in the circuit **A** is incorrect because the switch is in the closed position not open **C** is incorrect because the resistors are fixed resistors not variable **D** is incorrect because the circuit does not have an a.c. power supply the supply is a cell which is d.c.	**(1)** **AO1.1**

Question Number	Answer	Additional guidance	Mark
1(b)(ii)	(current in the circuit) decreases (1)	accept reduces/gets smaller/is less/goes down ignore slows down (the current)	**(1)** **AO1.1**

Total for Question 1 = 8 marks

Question number	Answer	Additional guidance	Mark
2(a)	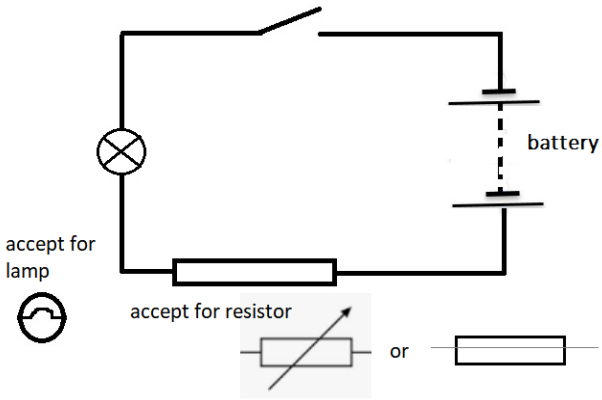 lamp symbol (1) switch symbol (1) open or closed resistor symbol (1) complete series circuit, with any circuit symbol(s) connected to the battery (1)	ignore any additional symbols ignore cells / batteries	**(4)** AO1

Question number	Answer	Additional guidance	Mark
2 (b)	**B** 5 A A, C and D are incorrect repetitions or addition		(**1**) AO1

Question number	Answer	Additional guidance	Mark
2 (c) (i)	substitution (1) (charge) = 0.46 x 30 evaluation (1) (charge) = 14 (C)	 any number that rounds to 14 e.g. 13.8 award full marks for the correct answer without working	(**2**) AO2

Question number	Answer	Additional guidance	Mark
2 (c) (ii)	substitution (1) (energy transferred) = 0.46 x 6.0 x 60 evaluation (1) (energy transferred) = 170 (J)	 allow (energy transferred) = 0.46 x 6.0 x 1 or (energy transferred) = 0.46 x 6.0 x 30 any number that rounds to 170 e.g. 165.6 or 166 allow answers that round to 2.8 or 83 e.g. 2.76 or 82.8 for 1 mark only award full marks for the correct answer without working	(**2**) AO2

Total for Q2 = 9 marks

Question Number:	Answer	Mark
6(a)	D diode **The only correct answer is D** ***A*** *is not correct as for a thermistor, current would increase with potential difference from the origin* ***B*** *is not correct as current against p.d for a resistor gives a straight line from the origin* ***C*** *is not correct as current against p.d for a resistor gives a straight line from the origin*	**(1)** AO 1 1

Question Number:	Answer	Additional guidance	Mark
6(b)(i)	substitution (1) (P)= 0.12 x 0.24 evaluation (1) 0.029 (W)	 accept 0.03 (W), 0.0288(W) 0.028 (W) power of ten error is awarded 1 mark award full marks for the correct answer without working	**(2)** AO 2 1

Question Number:	Answer	Additional guidance	Mark
6(b)(ii)	chooses /uses (1) E= V x I x t evaluation (1) 1.4 (J)	E =0.3 x0.13 x35 accept an answer that rounds to 1.4 (J) e.g. 1.365(J) a maximum of 1 mark is awarded in the case of a power of ten error award full marks for the correct answer without working	**(2)** AO 2 1

Question Number:	Answer	Additional guidance	Mark
6(b)(iii)	substitution (1) (Q)=0.13 x 35 evaluation (1) 4.6 (C)	 accept an answer that rounds to 4.6 e.g. 4.55 or in this context allow 4.5 power of ten error is awarded 1 mark award full marks for the correct answer without working	**(2)** AO 2 1

Question Number:	Answer	Additional guidance	Mark
6(c)	a comment that makes reference to any three of the following points: • idea that the current increases with the p.d. /voltage (1) • until (current) reaches a constant value (1) • the current is not directly proportional to p.d. (1) • uses idea that the values do not go up in equal steps / does not show doubling	 (staying) at 0.13(A)	**(3)** AO 3 2a AO 3 2b

(Total for Question 6 = 10 marks)

Question number	Answer	Additional guidance	Mark
5 (a) i	substitution (1) $(I = \frac{P}{V}) = \frac{1.9 \text{ (x } 10^3)}{230}$ (1) evaluation (1) 8.3 (A)	8.3 / 8.26 (A) award full marks for correct answer without working award one mark for 8.26×10^{-3} / 0.0083	(2) AO2

Question number	Answer	Additional guidance	Mark
5 (a) ii	choice and substitution (1) $E = I \times V \times t$ = 7.4 x 230 x 120 evaluation (1) 200000 (J)	accept 204000 / 204240 award full marks for correct answer without working award 1 mark for 3400 / 3404 (J) (using 2 minutes as time)	(2) AO2

Question number	Answer	Additional guidance	Mark
5 (b) i	Wire X .....earth.....(1) Wire Y .....live..... (1)	accept 'life'	(2) AO1

Question number	Answer	Additional guidance	Mark
5 (b) ii	Component Z ....fuse..... (1)		(1) AO1

Question number	Answer	Additional guidance	Mark
5 (c)	substitution (1) $(I_p) \times 230 = 19 \times 2.37$ rearrangement (1) $(Ip) = (19.0 \times 2.37) \div 230$ evaluation (1) input current = 0.196 (A)	rearrangement and substitution in either order allow numerical values written above equation $input\ voltage = (output\ voltage \times output\ current) \div input\ voltage$ award full marks for any answer that rounds to 0.2(00) (A) award 1 mark for 5.1(07) (substitution with upside down rearrangement) award full marks for correct answer without working	(3) AO2

(Total for Question 5 = 10 marks)

Question number	Answer	Additional guidance	Mark
5 (a) (i)	B live and neutral A , C and D are incorrect because the terms positive and negative are not used in the context of wires in a mains cable.		**(1)** **AO1**

Question number	Answer	Additional guidance	Mark
5 (a)(ii)	a description that includes any **two** from melts (1) if there is a fault (1) breaks the circuit (1) stops current (1) safety (1)	 blows / breaks if current too large prevents overheating / fire if no other marks scored allow 1 mark for identifying the fuse.	**(2)** **AO1**

Question number	Answer	Additional guidance	Mark
5 (b)	conversion of time (1) 1 x 60 (s) substitution (1) (I =) $\frac{9000}{230 \text{ (x 60)}}$ evaluation (1) (I =) 0.65 (A)	 any value that rounds to 0.65; e.g. 0.65217 0.7 0.6 award full marks for the correct answer without working allow 2 marks for answer of 39(.130)	**(3)** **AO2**

Question number	Answer	Additional guidance	Mark
5 (c) (i)	An explanation linking energy has been dissipated /wasted / lost (1) as thermal energy (1)	 energy has been transferred mechanically useful energy is less than total energy supplied identifies difference of 600(J) heat / to the surroundings ignore sound accept (some) energy has been transferred to thermal store for 2 marks	**(2)** **AO3**

Question number	Answer	Additional guidance	Mark
5 (c)(ii)	substitution (1) (efficiency =) $\frac{8400}{9000}$ evaluation (1) (efficiency =) 0.93	 0.9 93(%) allow values that round to 0.93 or 93(%) award full marks for the correct answer without working	**(2)** **AO2**

Total 10 marks

Question number	Answer	Additional guidance	Mark
6 (a)	voltmeter should be moved (1) (to be) in parallel with the resistor X (1)	voltmeter is in wrong place / (re)connect the voltmeter allow 'voltage' for 'voltmeter' in this context allow across X or equivalent statement answers may be seen on the diagram	**(2)**

Question number	Answer	Additional guidance	Mark
6 (bi)	0.9 (v)	0.90 ignore units ignore calculations	**(1)**

Question number	Answer	Additional guidance	Mark
6 (bii)	substitution (1) R = 2.1 / 0.041 evaluation (1) R = 51(.2) (Ω) (which is approx. 50 (Ω))	allow (V) = 0.041 x 50 V = 2.05 (v) (which is approx. 2.1) allow R = 51(.2) (Ω) with no working for 2 marks	**(2)**

Question number	Answer	Additional guidance	Mark
6 (biii)	recall and substitution (1) (P) = 2.1 x 0.041 evaluation (1) (P =) 0.086 (W)	allow any value that rounds to 0.086; e.g. 0.0861 (W) 0.09 (W) award full marks for the correct answer without working allow POT error for 1 mark	**(2)**

Question number	Answer	Additional guidance	Mark
6 (biv)	recall that effective resistance = sum of individual resistances (1) (resistance =) 50 + 22 evaluation (1) 72 (Ω)	 51 + 22 73 (Ω) award full marks for the correct answer without working	**(2)**

Question number	Answer	Additional guidance	Mark
6 (bv)	substitution (1) (E =) 3.0 x 0.041 x 2 (x60) evaluation (1) 15 (J)	 accept values that round to 15; e.g. 14.76 award full marks for the correct answer without working award 1 mark for answer of 0.246 (J) or 0.25 (J) without working	**(2)**

Total marks for Question 6 = 11 marks

Question number	Answer	Mark
8(a)	D variable resistor Options A, B and C are all wrong identifications with both the circuit components shown	(1) AO1

Question number	Answer	Mark
8(b)	C ammeter in series with component, voltmeter in parallel Only option C is correct for both the ammeter and the voltmeter	(1) AO1

Question number	Answer	Additional guidance	Mark
8c(i)	A description including as the potential difference (voltage) increases so does the current (1) idea of gradient of graph decreasing as V increases (1)	 positive correlation at a decreasing rate non-linear not directly proportional	(2) AO3

Question number	Answer	Additional guidance	Mark
8(c)(ii)	Award one mark for each row of the table (voltage V / current in mA) point P: 1(.00) / 20 point Q: 3.4 ±0.1 / 43 ±1	ignore any units added in the boxes	(2) AO2

Question number	Answer	Additional guidance	Mark
8(c)(iii)	substitution (1)		(2) AO2

Question number	Answer	Additional guidance	Mark
8(c)(iv)	an explanation linking any three of: identification of resistance increasing (1) heating (of the filament) (1) because of more collisions (1) of electrons (with ions / atoms / other electrons) (1)	temperature increases	(3) AO1

Question 8 =11 marks

Question number	Answer	Additional guidance	Mark
8 (a)(i)	Substitution and evaluation (1) 15 (Ω)		**(1)** **A02**

Question number	Answer	Additional guidance	Mark
8 (a)(ii)	select / recall (1) (power =) V x I or (power =) I^2 x R or (power =) $\frac{V^2}{R}$ substitution and evaluation (1) (power =) 1.4 (W)	 (power =) 4.5 x 0.3 0.3^2 x 15 $\frac{4.5^2}{15}$ allow 1.3(5) (W) award full marks for the correct answer without working	**(2)** **A02**

Question number	Answer	Additional guidance	Mark
8 (b)	an explanation linking any **three** from: lamp in second circuit is dimmer (than lamp in first circuit) (1) current in second circuit is less (than in first circuit) (1) potential difference / voltage across each lamp (in second circuit is) less / shared (1) idea that power of each lamp (in second circuit) is less / shared (1) the (total) resistance of the second circuit is more (than in first circuit) (1)	accept reverse arguments throughout	**(3)** **A01**

Question number	Answer	Additional guidance	Mark
8 (c)	a diagram of a circuit including **all** of the following: power supply / cell(s) / battery, identifiable resistance wire an ammeter a voltmeter (1) plus any **two** from ammeter in series (1) voltmeter in parallel (1) indication of tapping off / using 50cm of resistance wire (1)	accept symbols accept ohmmeter with resistance wire only ignore lamp(s) / additional resistors allow ohmmeter (across wire) instead of ammeter and voltmeter for 1 mark e.g. (crocodile) clips	**(3)** **A02**

Question number	Answer	Additional guidance	Mark
8 (d)			**(2)**
	d.c. - (current) in one direction only (1)	one way	**AO1**
	a.c. - (current) changes direction (1)	both ways	

Total 11 marks

Question number	Answer	Additional guidance	Mark
8 (a)	substitution (1) (E =) 0.042 x 1.5 evaluation (1) (E =) 0.063 (J) (1)	 6.3×10^{-2} award 2 marks for the correct answer without working accept 0.063 to any other power of 10 for 1 mark	(**2**) AO2

Question number	Answer	Additional guidance	Mark
8(b)	voltmeter connected in parallel with the iron wire / any part of the iron wire (1) ammeter connected in series with the iron wire (1) example: 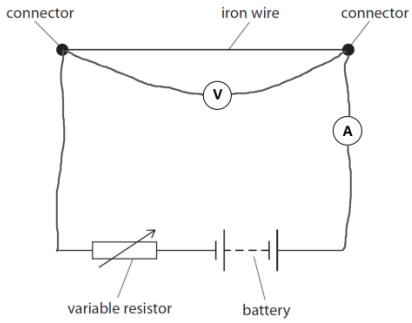 	accept any recognisable symbols. accept symbol drawn over connecting wire do not credit the same type of meter shown in contradictory positions	(**2**) AO1

Question number	Answer	Additional guidance	Mark
8 (c) (i)	one from (1) metre rule / metre stick / ruler / (measuring) tape / crocodile clip / other clip / wire cutters / pliers / sliding contact jockey / more (iron) wire	accept scissors ignore additional electrical devices such as ohmmeter / multimeter	(**1**) AO3

Question number	Answer	Additional guidance	Mark
8(c)(ii)	(ii) Figure 4 shows a graph of the results. 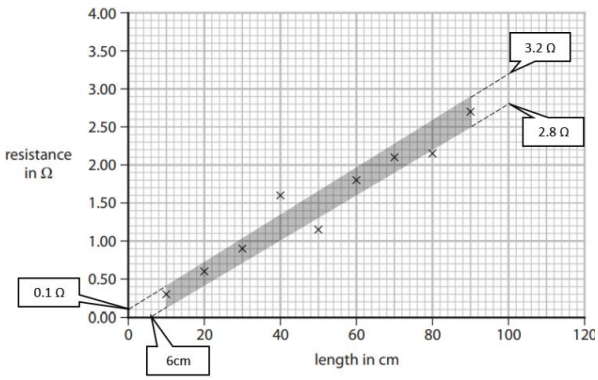 	accept any straight line within the shaded range shown judge by eye. ignore extrapolation	(**1**) AO2

Question number	Answer	Additional guidance	Mark
8 (c)(iii)	any number between 2.7 and 3.3 inclusive	allow ecf from (ii) ±0.1 Ω	(**1**) AO2

Question number	Answer	Additional guidance	Mark
8 (c) (iv)	explanation linking any **two** from: (variable) resistor increases the resistance (of the circuit) (1) (therefore) keeps the current constant / small(er) (1) because **current** increases temperature of the (iron) wire (1)	accept flow of electrons / charge for current reduces current / limits the current ignore slows the current / charge accept current heats up (iron) wire accept for two marks: adjust variable resistor to keep current constant / small	(**2**) AO1

Question number	Answer	Additional guidance	Mark
8 (d)	substitution (1) 1.56 = 0.45 x R rearrangement and evaluation (1) (R =) 3.5 (ohms)	alternative method rearrangement (1) (R =) $\frac{V}{I}$ **or** (R=) $\frac{1.56}{0.45}$ (substitution and) evaluation (1) (R =) 3.5 (ohms) allow values that round to 3.5 e.g. 3.46(666) 3.47 etc award full marks for the correct answer without working	(**2**) AO2

Total 11 marks

8(a)	**The only correct answer is B** ***A, C*** *and* ***D*** *are not correct because they do not add up to the current entering the junction AND they do not equal the current coming from the battery*	**(1)** **AO1.1**

Question	Answer	Additional guidance	Mark
8(b)(iii)	substitution into $V = IR$ (1) 6(.00) = 9.1 (× 10^{-3}) × R rearrangement (1) (R =) $\frac{6(.00)}{9.1 (\times 10^{-3})}$ evaluation (1) 660 (Ω)	allow substitution and rearrangement in either order accept 18.2/2 or 27.3/3 or (36 to 37)/4 in place of 9.1 allow substitution of correct values into a visible, incorrectly rearranged algebraic equation for this mark only (R =) $\frac{V}{I}$ allow values that round to 660 e.g. 659.3 award full marks for the correct answer without working. value rounding to 660 to any other power of 10 scores 2 marks	**(3)** **AO2.1**

Question	Answer	Additional guidance	Mark
8(b)(iv)	an explanation linking: (total) resistance increases (1)		**(3)** **AO3.2**

Question	Answer	Additional guidance	Mark
8(c)	substitution (1) $P = 9.0 \times 230$ evaluation (1) 2100 (W)	 allow values that round to 2100 (W) e.g. 2070 (W) award full marks for the correct answer without working	**(2)** **AO2.1**

(Total for question 8 = 11 marks)

Question	Answer	Additional guidance	Mark

Question Number	Answer	Additional guidance	Mark
9 (a)	50(Hz) (1)		**(1)** **AO1.1**

Question Number	Answer	Additional guidance	Mark
9(b)	substitution (1) (P=) 0.53 x 230 evaluation (1) 120 (W)	 accept values that round down to 120 to 2s.f. e.g.121.9 or 122 award full marks for the correct answer without working	**(2)** **AO2.1**

Question Number	Answer	Additional guidance	Mark
9(c)(i)	**A** live pin **B** is incorrect because the mains plug has no negative pin **C** is incorrect because the neutral pin is at 0 V **D** is incorrect because the mains plug has no positive pin		**(1)** **AO1.1**

Question Number	Answer	Additional guidance	Mark
9(c)(ii)	An explanation linking the fuse melts (1) (so) stops / switches off current (1)	 allow fuse blows / breaks circuit is broken allow switches off {charge flow / circuit / TV / appliance / supply / electricity / voltage / power / energy}	**(2)** **AO2.2**

Question Number	Answer	Additional guidance	Mark
9(c)(iii)	**any one** from circuit breaker (1) earth (wire/pin) (1) surge protector (1) cable clamp (inside plug) (1) insulation / armouring (1) socket protector/cover (1)	 accept RCD / ELCB / RCCB / GFCI / MCB allow ground accept SPD accept rubber coating accept plug cover ignore switch / fuse / fuse box	**(1)** **AO1.1**

Question number	Indicative content	Mark
***9(d)**	Answers will be credited according to candidate's deployment of knowledge and understanding of the material in relation to the qualities and skills outlined in the generic mark scheme. The indicative content below is not prescriptive and candidates are not required to include all the material which is indicated as relevant. Additional content included in the response must be scientific and relevant. AO1 / AO3 **Distribution** • voltage at power station higher than in homes • transformers change voltages • electrical energy is transferred on overhead power lines • overhead power lines are at 132 kV **Action of transformers** • step-up transformers convert 25 kV to 132 kV • step-up transformers reduce the current	**(6)** **AO1.1 AO3.3a**

	• step down transformers convert high voltages of power lines to 230 V for use in homes • low voltage is safer for use in homes **Efficiency** • transformers make the distribution of electricity more efficient • high currents cause heating effect • dissipation of thermal energy/heat to the atmosphere • increasing the voltage/ reducing the current in the overhead power lines reduces energy / heat loss	

Level	Mark	Descriptor
	0	• No awardable content
Level 1	1–2	• Interpretation and evaluation of the information attempted but will be limited with a focus on mainly just one variable (AO3) • Presents an explanation with some structure and coherence (AO1)
Level 2	3–4	• Interpretation and evaluation of the information on both variables synthesises mostly relevant understanding (AO3) • Presents an explanation that has structure, which is mostly clear coherent and logical.(AO1)
Level 3	5–6	• Interpretation and evaluation of the information, demonstrating throughout the skills of synthesising relevant understanding (AO3) • Presents an explanation that has a well-developed structure which is clear, coherent and logical. (AO1)

Level	Mark	Additional Guidance	General additional guidance – the decision within levels e.g. - At each level, as well as content, the scientific coherency of what is stated will help place the answer at the top, or the bottom, of that level.
	0	No rewardable material.	
Level 1	1–2	Additional guidance Isolated facts about power distribution at any point.	Possible candidate responses power lines are at 132000V homes get electricity at 230V transformers change voltages improves efficiency
Level 2	3–4	Additional guidance Limited explanation giving link between voltage change and type of transformer OR link between high voltage and power lines and energy loss OR link between current and transformer / energy loss	Possible candidate responses the step-up transformer increases the voltage the step-down transformer changes the voltage from 132000 V to 230V A is a step-up transformer and B is a step-down transformer the high voltage in overhead power lines reduces heat losses it is more efficient because the power lines are at a high voltage transformers can reduce current low current means less energy loss
Level 3	5–6	Additional guidance Detailed explanation linking role of transformer WITH current decrease to reduce energy loss	Possible candidate responses transformer A decreases the current to reduce heat loss

Total for Question 9 = 13 marks