GuideMyGrades

YOUR GOALS. OUR EXPERTISE.

EDEXCEL GCSE PHYSICS: QUESTIONS BY TOPIC

Forces and Matter (15)

GCSE Physics (Foundation) Topic 15

2 questions · 19 marks · Mark schemes included

Pearson Edexcel GCSE (9-1) Physics 1PH0, Foundation Tier, June 2018 - June 2025

guidemygrades.com
@Guidemygrades
@Guidemygrades
@Guidemygrades
info@guidemygrades.com
Piccadilly Business Centre, Unit C, Aldow Enterprise Park
Blackett Street, Manchester, M12 6AE

HOW TO USE THIS BOOKLET

Questions run from the lowest mark tariff to the highest, so similar questions sit together.
Click any row below to jump straight to that question.
On every question page, click ANSWER in the top-right corner to jump to its mark scheme.
Diagrams, graphs, tables and data are printed exactly as they appeared in the original papers.

	QUESTION	SOURCE	MARKS	PAGE
1.	**Q4**	Paper 2 November 2020	9	**4**
2.	**Q6**	Paper 2 June 2025	10	**8**

QUESTIONS

2 questions · 19 marks · lowest tariff first

9-MARK QUESTIONS

1 question in this booklet

4 Figure 10 shows a toy used to launch a ball.

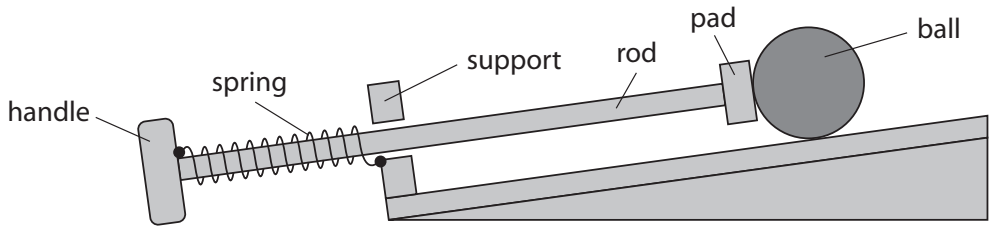

Figure 10

One end of the spring is fixed to the handle.

The other end of the spring is fixed to the support.

(a) A child pulls the handle, stretching the spring.

Figure 11 shows the toy with the spring stretched.

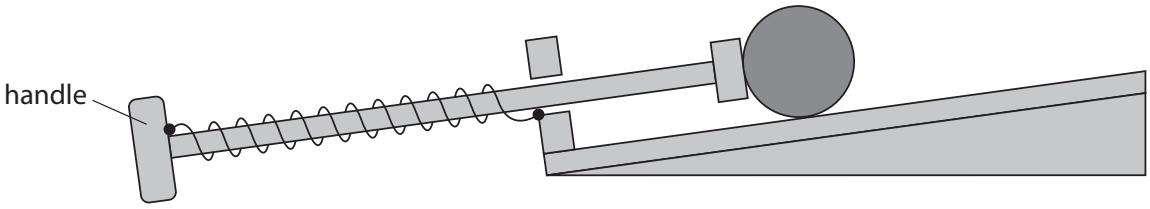

Figure 11

(i) Which of these shows the forces acting on the handle when the child keeps the spring stretched?

Ignore the force due to gravity.

(1)

☒ **A** ☒ **B** ☒ **C** ☒ **D**

(ii) In Figure 11, the extension of the spring is 0.070 m.

The spring constant (k) is 20 N/m.

Calculate the force used to extend the spring.

Use the equation

$$\text{force} = k \times \text{extension}$$

(2)

force = ... N

(b) The child pulls the handle until the pad is against the support as shown in Figure 12.

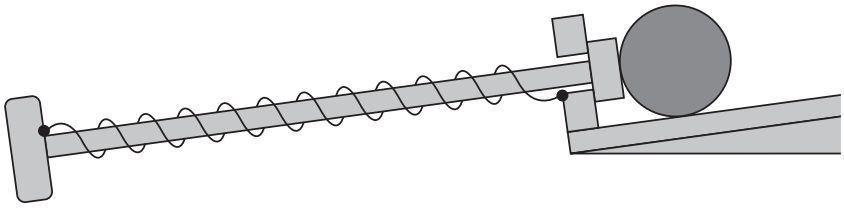

Figure 12

(i) The extension of the spring is 0.09 m.

The spring constant (k) is 20 N/m.

Calculate the work done in extending the spring by 0.09 m.

Use the equation

$$\text{work done} = \tfrac{1}{2} \times k \times (\text{extension})^2$$

(2)

work done = ... J

(ii) The child lets go of the handle.

The ball starts to move.

The spring returns to its original length.

Describe the energy transfer that takes place when the ball starts to move.

(2)

.....

.....

.....

.....

(iii) The child can only stretch the spring until the pad is pressing against the support.

Explain how the design of the toy prevents the spring from becoming damaged.

(2)

.....

.....

.....

.....

(Total for Question 4 = 9 marks)

10-MARK QUESTIONS

1 question in this booklet

6 (a) Bending or stretching objects can cause distortions.

Which of these small distortions can be described as **inelastic**?

(1)

- ☒ **A** stretching a rubber band
- ☒ **B** squashing a piece of modelling clay
- ☒ **C** compressing a steel spring
- ☒ **D** bending a plastic ruler

(b) Figure 12 shows what happens when weights are added to the end of a wooden strip.

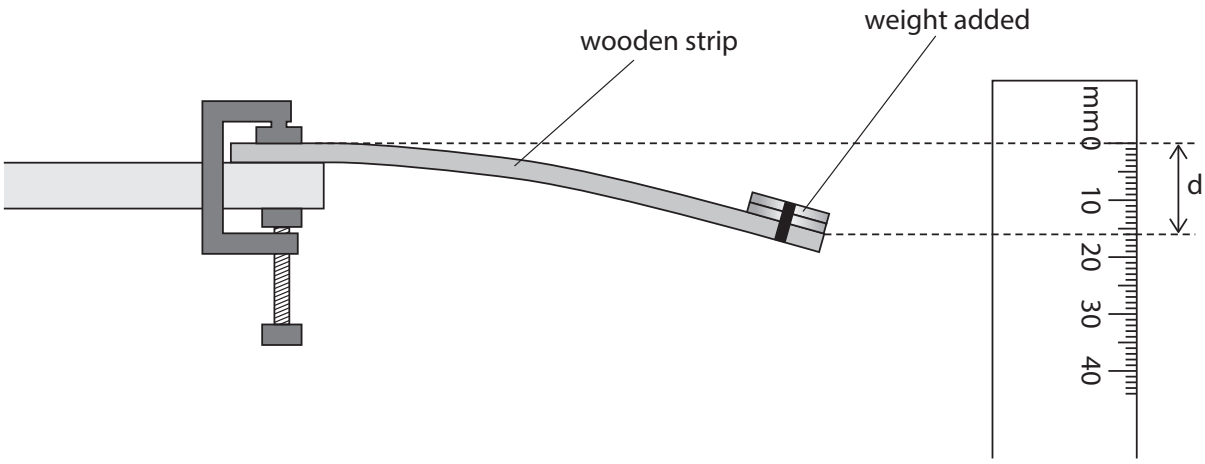

Figure 12

(Source: https://www.schoolphysics.co.uk/age16-19/Mechanics/Simple%20harmonic%20motion/text/Vibrating_cantilever/index.html)

The end of the strip of wood moves down by a distance, d, as shown in Figure 12.

(i) Describe how a student could investigate how the distance, d, depends on the weight added to the wooden strip.

(4)

.....

.....

.....

.....

.....

.....

.....

.....

(ii) A student conducts a second experiment with the same equipment where they decide to keep the size of the weight constant.

State another variable, other than the weights added, that would affect the distance, d.

(1)

.....

.....

(c) (i) Figure 13 shows a spring stretched by some weights.

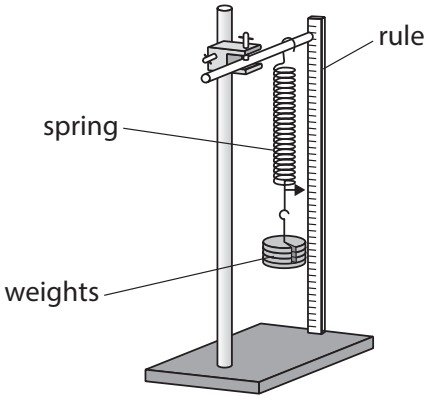

Figure 13

The extension of the spring is 6.2 cm when a weight of 2 N is added.

Calculate the spring constant, *k*, of the spring.

Use the equation

$$k = \frac{F}{x}$$

(2)

spring constant, *k* = ... N / m

(ii) Work is done when a spring is stretched.

A different spring has a spring constant of 25 N / m.

The spring is stretched by 0.06 m.

Calculate the energy transferred by stretching the spring.

Use the equation

$$E = \frac{1}{2} \times k \times x^2$$

(2)

energy transferred = ... J

(Total for Question 6 = 10 marks)

MARK SCHEMES

official Pearson Edexcel mark schemes

Question number	Answer	Additional guidance	Mark
4ai	 D A and B are incorrect because they only show one force C is incorrect because the forces are in the wrong direction		(1)

Question number	Answer	Additional guidance	Mark
4 aii	substitution (1) (F =) 20 x (0.0)7 evaluation (1) 1.4 (N)	award full marks for the correct answer without working allow 1 mark max for POT error	(2)

Question number	Answer	Additional guidance	Mark
4 bi	substitution (1) (E =) ½ X 20 x 0.09$^{(2)}$ evaluation (1) 0.08(1) (J)	allow 1 mark for ½ x 20 x 9^2 or answer of 810 (J) or answer of 90 (J) award full marks for the correct answer without working	(2)

Question number	Answer	Additional guidance	Mark
4 bii	a description including mention of one relevant energy store (1) correct transfer in context (1)	 potential/ PE/ kinetic/ KE/ thermal/ heat/ elastic potential energy stored in the spring transferred to kinetic energy of the ball/rod scores 2 marks kinetic energy of rod is transferred to kinetic energy of ball scores 2 marks idea of energy transferred to the surroundings/ thermal scores 2 marks	**(2)**

Question number	Answer	Additional guidance	Mark
4 biii	an explanation linking two from (controls the maximum) extension (1) idea of keeping below the elastic limit (1) (which would result in) spring being permanently stretched (1)	ignore <u>damaging</u> the spring (given in stem) stretch prevents spring being over-stretched / extended too far scores 2 marks allow distorted/ break	**(2)**

Total for question 4 = 9 marks

Question Number	Answer	Mark
6(a)	**B** squashing a piece of modelling clay **A** ,**C** and **D** are incorrect because all return to original shape when the force is removed. The distortion is elastic.	**(1)** **AO1.1**

Question Number	Answer	Additional guidance	Mark
6(b)(i)	a description including any **four** of the following: measure **initial** d / distance / height (1) change weight (1) measure **new** d / distance / height (1) repeat / continue (changing weight and measuring d) (1) plot a graph (d against weight) (1)	accept reference to 16 (mm)	**(4)** **AO3a** **AO 3.2a/2b**

Question Number	Answer	Additional guidance	Mark
6(b)(ii)	any **one** from: distance between the clamp and the masses (1) (change) strip (1)	accept ruler for strip throughout accept length of the strip accept thicker strip /thinner strip / material of strip / strip of different density etc.	**(1)** **AO3.3b**

Question Number	Answer	Additional guidance	Mark
6(c)(i)	substitution (1) (k =) $\frac{2}{6.2 (\times 10^{-2})}$ evaluation (1) 32 (N/m)	 accept answers which round to 32 32 to any other power of ten scores 1 mark award full marks for the correct answer without working ignore 3.1 (from 6.2/2)	**(2)** **AO2.2**

Question Number	Answer	Additional guidance	Mark
6(c)(ii)	substitution (1) (E =) $0.5 \times 25 \times 0.06^2$ evaluation (1) 0.045 (J)	 accept 0.05 (J) 0.045 to any other power of ten scores 1 mark award full marks for the correct answer without working	**(2)** **AO 2.1**

Total for Question 6 = 10 marks